COMPATIBLE MOTOR DIMENSIONS							
A	B	C	D	E	F	H	L
≦8	30	≦28	≦3	46	4.1~5.0	35~50	≧C-3

※BUSHING WILL BE SUPPLIED WHEN THE MOTOR SHAFT DIAMETER IS SMALLER THAN 8

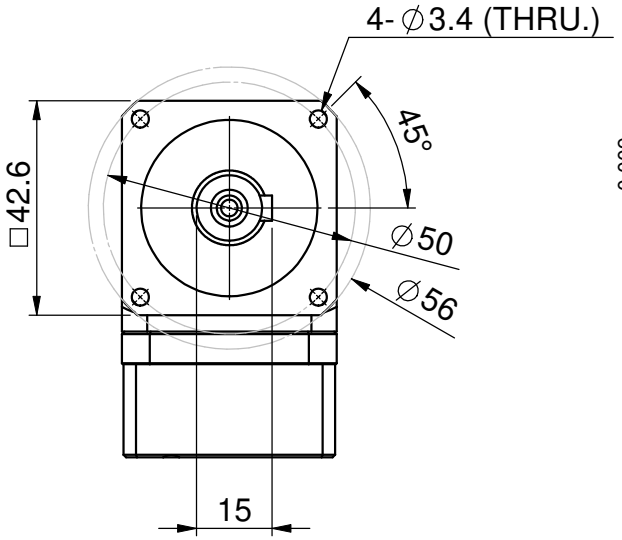

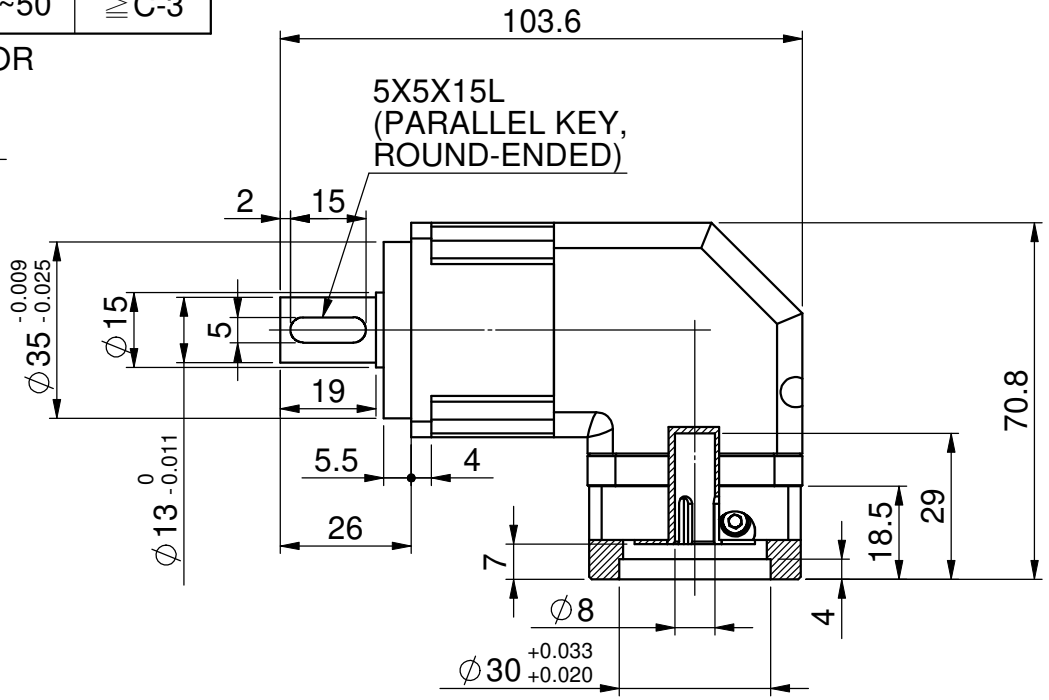

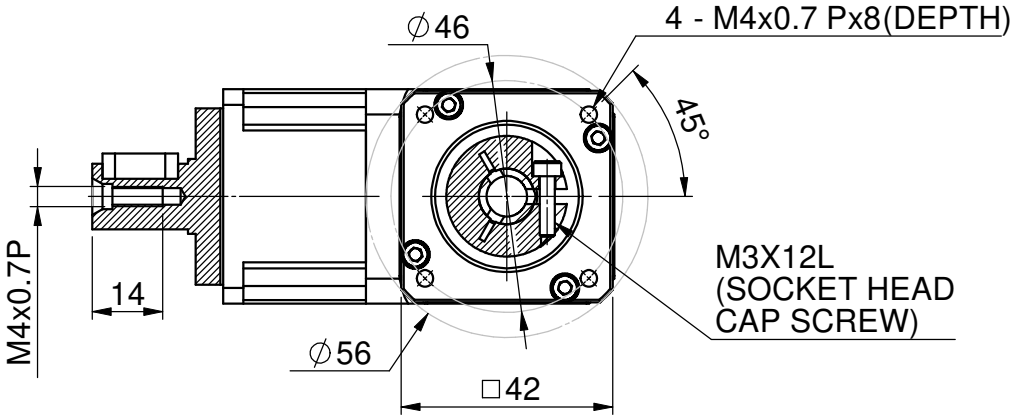

ADAPTER PART NO.
234BC11116

SPECIFICATIONS ARE SUBJECT TO CHANGE WITHOUT PRIOR NOTICE

Unit	mm	Model Name	PGR42 1 STAGE	SESAME MOTOR CORP.
Project		Drawing No.	7A1XS.030042.111	